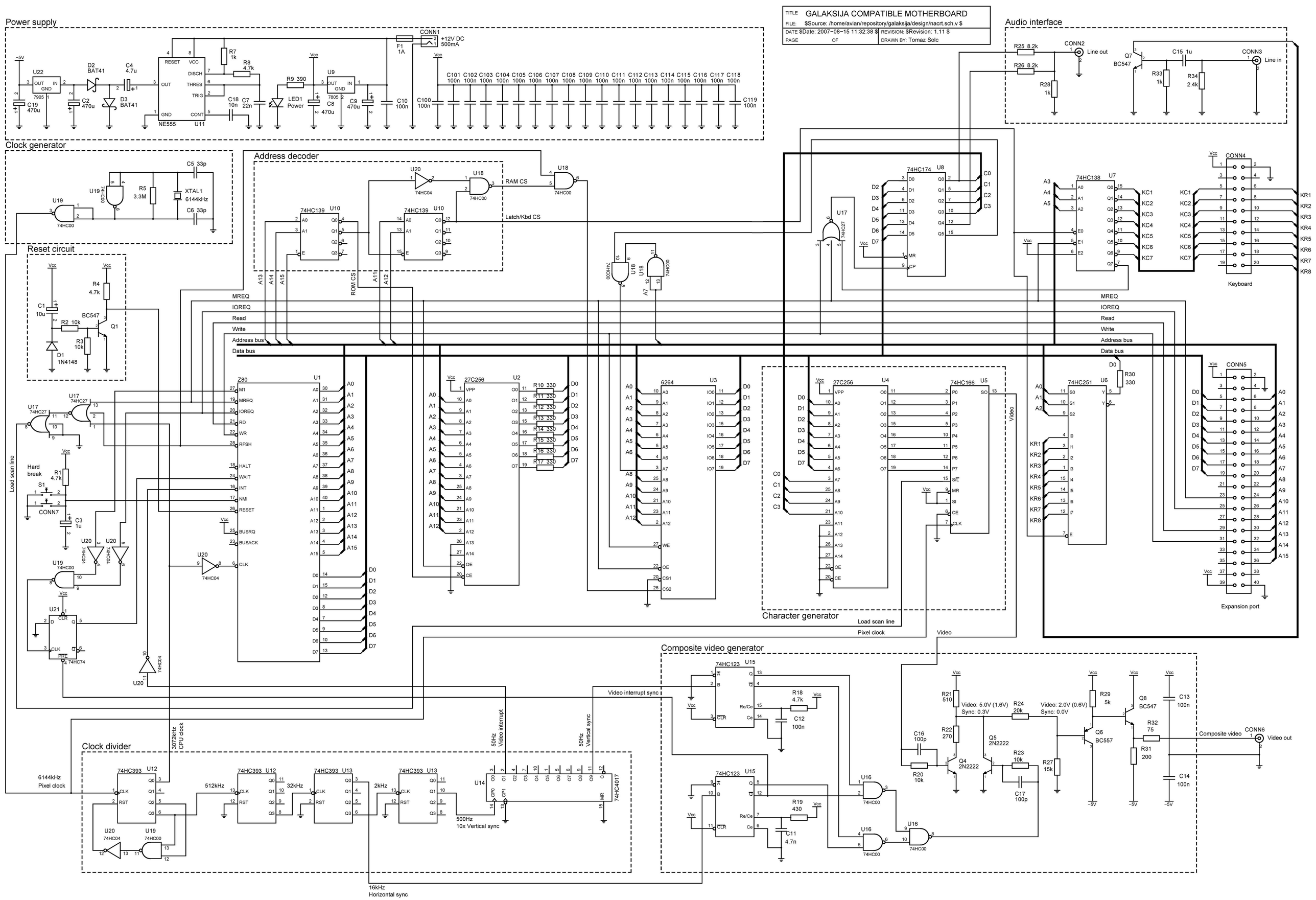
TITLE GALAKSIJA COMPATIBLE MOTHERBOARD
FILE: $Source: /home/avian/repository/galaksija/design/nacrt.sch,v $
DATE $Date: 2007-08-15 11:32:38 $
REVISION: $Revision: 1.11 $
PAGE OF
DRAWN BY: Tomaz Solc
Power supply
Audio interface
Clock generator
Address decoder
Reset circuit
Keyboard
Character generator
Expansion port
Composite video generator
Clock divider
Load scan line
Pixel clock
Video
Video interrupt sync
Composite video
Video out
Line out
Line in
+12V DC
500mA
MREQ
IOREQ
Read
Write
Address bus
Data bus
RAM CS
Latch/Kbd CS
ROM CS
3072kHz
CPU clock
6144kHz
Pixel clock
512kHz
32kHz
2kHz
500Hz
10x Vertical sync
50Hz
Vdeo interrupt
50Hz
Vertical sync
16kHz
Horizontal sync
Hard break
Video: 5.0V (1.6V)
Sync: 0.3V
Video: 2.0V (0.6V)
Sync: 0.0V